HCR Series

FRD Furukawa reserves right to change specifications without prior notice.

FRD FURUKAWA ROCK DRILL CO.,LTD.
5-3, 1-chome, Nihonbashi, Chuo-ku, Tokyo 103-0027, Japan
Phone +81-3-3231-6982 Fax +81-3-3231-6994

ISO9001 ISO14001
Takasaki, Yoshii Works
Certified Management System

VEGETABLE OIL INK

HCR910-DS-E1105-F1
Printed in Japan

FRD FURUKAWA

Hydraulic Crawler Drill

HCR910-DS

Tier3 / Euro Stage - 3

FRD FURUKAWA ROCK DRILL

The ultimate combination or performance and economy.

HCR910-DS

- ★ New designed economy mode
- ★ New comfortable cab design
- ★ New installed air conditioner
- ★ New tilt type control deck

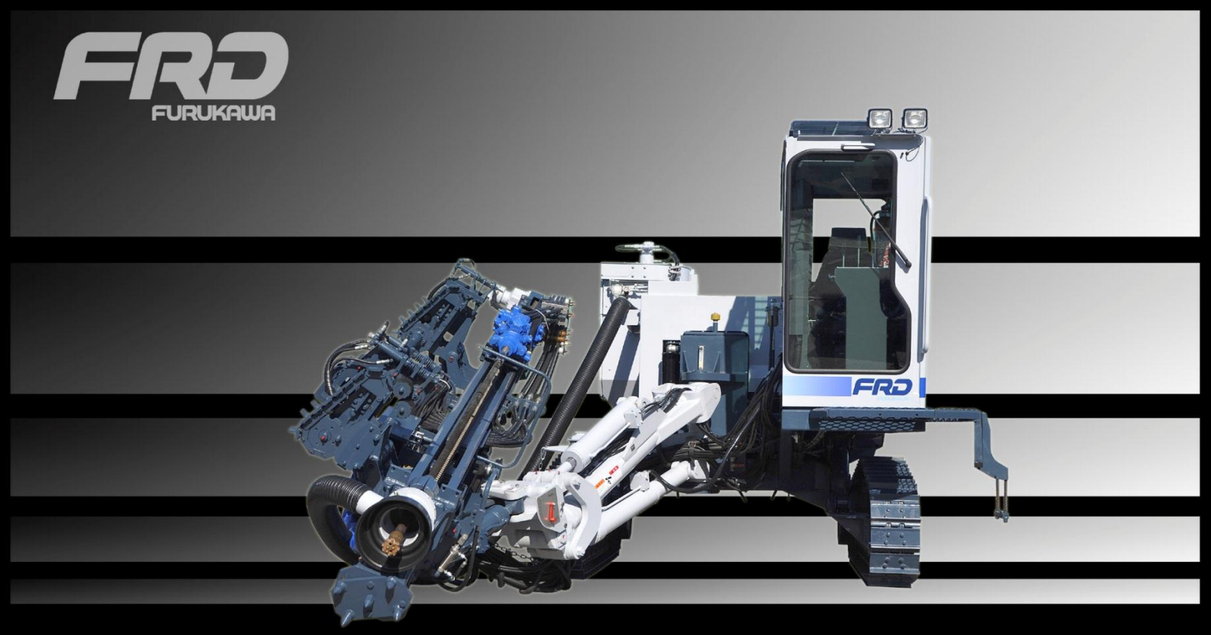

FRD FURUKAWA

Drilling performer, HCR910-DS High-productivity & Durability

Drill faster and straighter with our patented HD709 drifter.

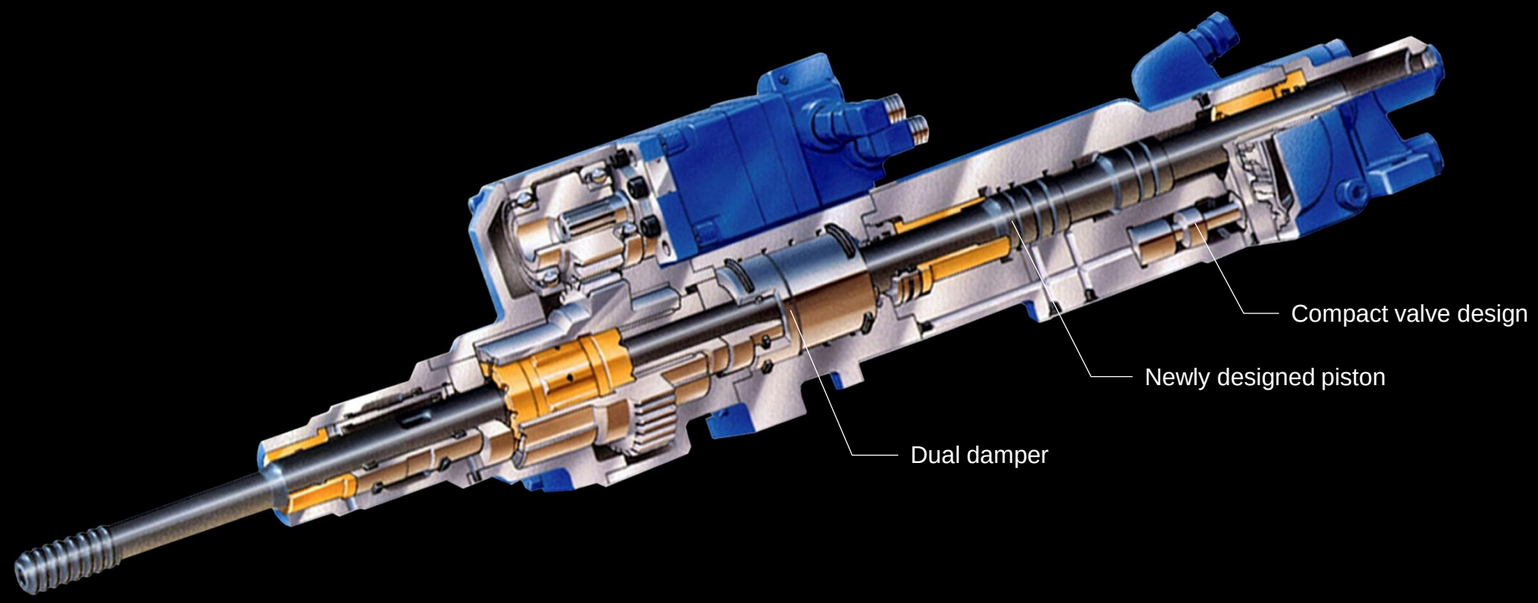

HCR910-DS

Dual-damper system DDS

FRD has developed the Dual-Damper System, a first in the industry. For maximum energy transfer, active DDS minimizes return of shock waves by keeping the bit firmly against the rock at all times during drilling. Active DDS minimizes percussion energy loss and by optimizing the overall feed force, greatly improves the life of drilling accessories. An additional benefit is greatly improved life of drilling accessories.
（U.S. PATENT No.5,896,937）

Compact valve design

The FURUKAWA HD700 series drifter is designed to minimize drill noise and vibration without sacrificing performance. Incorporating a new piston design, the HD709 drifter maximizes energy transmission and drills effectively in a variety of rock types.

Reverse percussion system

The Reverse Percussion System(RPS)makes it easier to free a stuck rod.
A substantial increase in extraction force allows the field proven RPS(optional) to remove struck rods quickly.

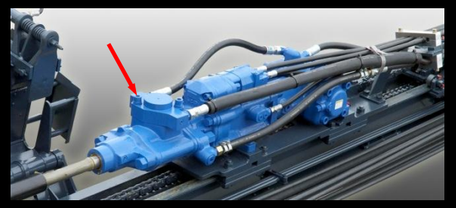

Maximizes operator performance with the ultimate in drilling technology.

HCR910-DS

Powerful CAT engine is fully compliant with tire3 / Euro stage-3 emission control. It gives full control for easy drilling.

Thanks to advanced hydraulic and pneumatic technology, output energy can be transferred to each component with minimum power loss.
These systems support high productivity.

CATERPILLAR and CAT are registered trademarks of Caterpillar Inc.

New designed economy mode

By using our-saving switch, fuel consumption is reduced during light work conditions.
（Maximum 30 % reduction on previous model.）

While drilling, Engine speed can be adjusted lower than power mode. Engine speed can be selected from one of the following speeds.

1,600min^{-1}
1,800min^{-1}
2,000min^{-1}

（ at the power mode, the engine speed is 2,200 min^{-1} ）

Even in the economy mode, you can realize the perfect cleaning as power mode does.
（ For the hole cleaning, engine speed automatically increases up to 2,200 min^{-1}.）

Digital engine indicator

Easy check engine condition in the Cab.
- ●Engine rpm
- ●Engine hour meter
- ●Engine coolant temp
- ●Engine hydraulic pressure

etc.

Field proven rod changer system

The hydro-mechanical In-line-1 conventional design rod changer is field proven. Rod change speed is extremely fast.

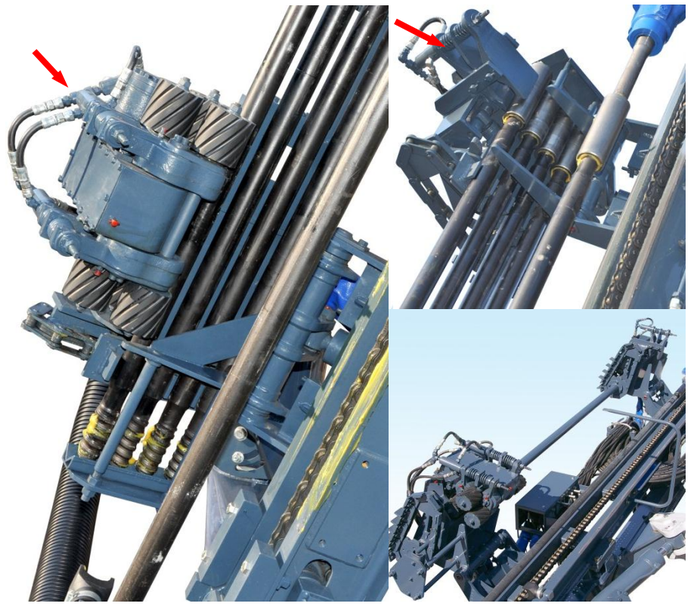

●Rod changing lever

①Roller rotation／Roller slide
②Carrier Swing in ／Rod adding or Rod re-lease

Easy operation and improved - reliability

High capacity compressor & Dust collector

High out-put compressor increases flushing air,provides faster drilling and decreases bit wear.The upgraded dust collector has a suction capacity.The dust collector includes an effective pre-cleaner to reduce the escape available for difficult drilling conditions.

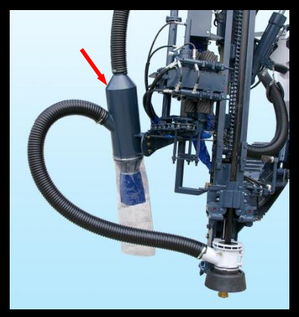

New design and useful control deck

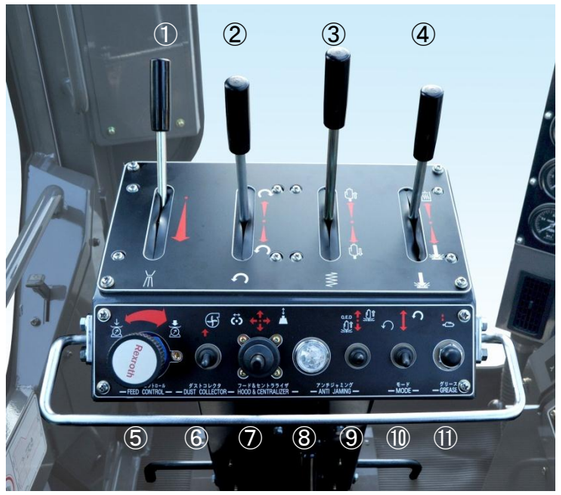

HCR910-DS is provided with operator proven “triple plus one” drill control design. FRD experienced operators will perform their skill level from day one, with triple hydraulic drill control and one air control lever layout. No learning time is required.

■Control panel ①～④

①Flushing lever
②Rotation lever
③Feed lever
④Percussion lever

■Switch panel ⑤～⑪

⑤Feed control valve
⑥Dust collector switch
⑦Food & Centralize
⑧Anti-jamming pilot lamp
⑨Anti-jamming
⑩High rotation/Normal rotation switch
⑪Grease lubrication switch

Anti-jamming device

An anti-jamming device optimizes the drilling condition for a variety of rock types, thus offering extended bit and rod life, and consequent reduction in running cost.

Mode selector

A mode switching hydraulic circuit performs switching between N mode for homogeneous rocks and H mode for hard rocks, thus enabling safe and speedy drilling.

Easy to check hole

Sliding suction cap can be raised to allow a fast visual check of operation.

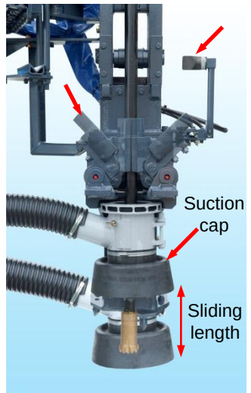

Heavy duty undercarriage & oscillating

Heavy-duty track flames provide strength and durability. One-piece drive sprockets are manufactured with hardened surfaces for longer life. Heavy-duty track links are forged from high-manganese alloy steel, and pins and bushings are induction-hardened.Standard full track guards protect undercarriage, Track tension can be adjusted easily with a grease gun.

The entire machine oscillates up-down 10 degrees total 20 degree to maintain machine level. And right -and-left tracks equalize 20 degrees to negotiate uneven ground.

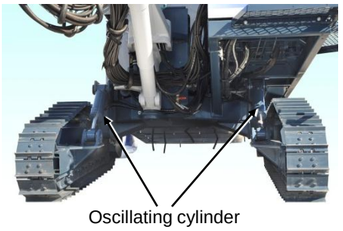

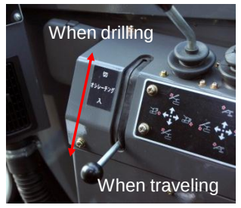

Combining performance and economy

HCR910-DS

New design comfort cab

New design cab provides large windows at the front and on the right side to maximize operator visibility. Cab is air conditioned and pressurized with air filters to keep out dust.

New design cab（Photo:Standard cab）

①Engine start switch
②Engine throttle
③FM/AM Radio
④Control panel for air conditioner
⑤Compressor switch
⑥Front Light switch
⑦Rear Light switch
⑧Front window wiper switch
⑨Upper window wiper switch

①Warning lights
②Temp.Gauge, Compressor
③Temp.Gauge, Hydraulic
④Engine monitoring display

Air Conditioner Ventilation duct.

① ② ③

Comfortable control levers

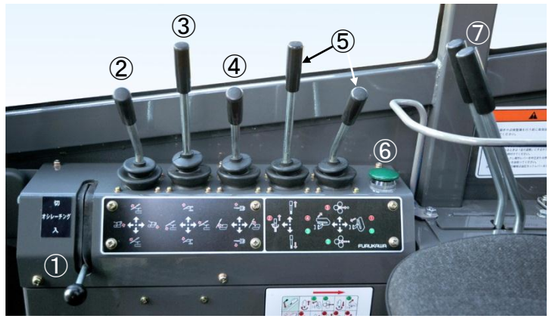

Mutual design lever for easy control.

① Oscillating lock lever
② Guide slide & Oscillating
③ Guide tilt & Guide swing
④ Boom lift & Boom swing
⑤ Rod changer（2 lever）
⑥ Hone S/W
⑦ Traveling lever
⑧ Drink holder

Operator's seat

Hi-back operator's seat with fabric upholstery and arm rests, holds the operator in an optimum position all day.

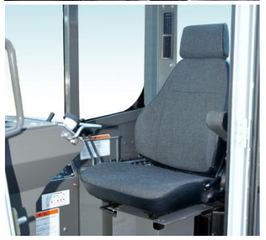

Tilt type control deck

Tilt lock release pedal.

Pressure gauge installed to center pillar.
Easily checkable from sitting position.

① Impact pressure gauge
② Feed pressure gauge
③ Rotation pressure gauge
④ Flashing air pressure gauge

Easy Maintenance & Safety Functions.

HCR910-DS

Tough hose reels

Extends hose life, ensures longer service life and reduces service load.

Wear Plate

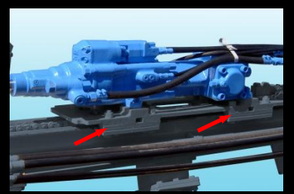

Synthetic ware plates (Optional) for drifter carriage

Air conditioner filter

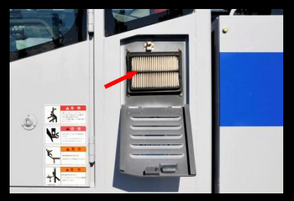

Accessibility For Maintenance

Walk-around, ground-level maintenance provides fast, easy upkeep or repair. Hinged service doors provide easy access to required areas.

Access to the right side cover

Fully openable access cover makes access to the radiator, the grease can and the drilling control valves easier.

Access to the left side cover

Service for the engine and battery, the electric control panel can be reached from the left side access cover.

Access to the Rear cover

Filters are within the reach.

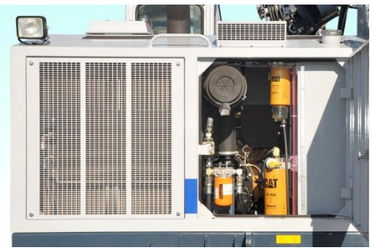

For Safety equipment

Fan guards

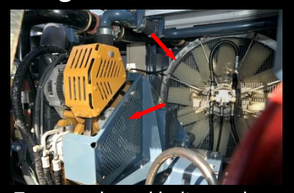

Fan guards and belt guards are standard.

Travel lock plates

Engage travel lock while drilling.

Head guards

Roof is reinforced and overhead window is steel gauge protected.

Fire extinguisher

Located at rear-right-side of the cab.

ROPS/FOPS Cab（Option）

ROPS：
Roll-Over Protective Structures

FOPS：
Falling-Object Protective Structures

Access to the Upper cover

Can easily access to the engine room.

Hoses and piping clearly accessible for Maintenance

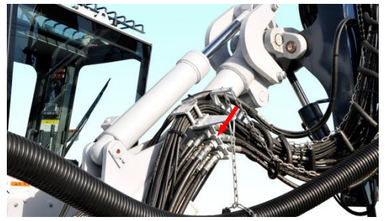

■ Standard & Option equipment

Model		HCR910-DS
Drifter		
HD709		Standard
Dual damper system		Standard
Reveres percussion		Option
Guide shell		
Hydraulic centralize		Standard
Sliding suction cap		Standard
Synthetic wear plate for carriage		Option
Synthetic hose reel		Standard
Rod changer		
Rod length	10ft	Standard
Rod size	32H, 38R (T38)	Select
	38H, 45R (T45)	Select
MM/MF rod	32H, 38R (T38)	Select
	38H, 38R (T38)	Select
Starter rod	10ft 12ft 13ft	Standard
Rotator		Standard
Boom		
Fix boom		Standard
Undercarriage		
Shingle shoe		Standard
Sprocket guard		Standard
Lifting eyes for transportation		Optional
Dust collector		
Pre-cleaner		Optional
Folding bracket for pre-cleaner		Optional
Exhaust shutter		Optional
Sinter-lamellar filter		Optional
Cab		
Steel cab		Standard
ROPS/FOPS cab		Optional
Air conditioner		Standard
High-backed seat		Standard
Seat belt		Optional
FM/AM radio		Standard
Rotating light (Yellow)		Optional
Leveler		Optional
Side door mirror		Optional
Additional lights（70Wx2）		Optional
Catwalk		Standard
Fire extinguisher		Standard
Evacuation hammer		Optional
Control		
Pull to drill, drill control		Standard
Direct boom control		Standard
Anti-jamming system		Standard
2-Lever rod-changer control		Standard
Track oscillation lock		Standard
Back-up buzzer		Standard
Engine throttle dial		Standard
Auto throttle control for percussion and air flow		Standard
Others		
Power saving mode selector		Standard
Tilt guide angle indicator		Standard
Swing guide angle indicator		Optional
2dimentional electric angle indicator		Optional
Emergency shut down system		Optional
Hour meter for engine		Standard
Hour meter for drifter		Optional
Tool box		Optional
Heavy duty under cover		Optional
Water separator for engine		Standard
Winter package		Optional
High capacity battery		Optional

■ Drilling Coverage（mm）

■ Horizontal drilling coverage

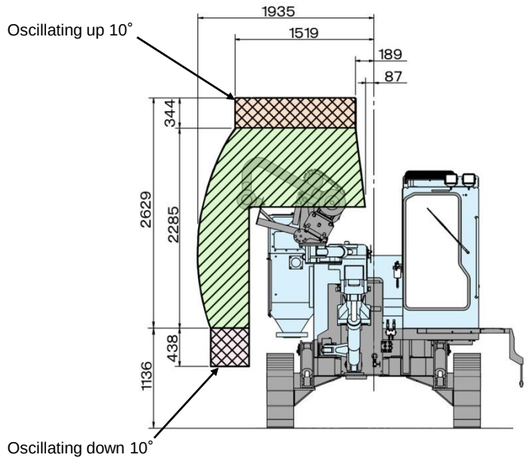

■ Vertical drilling coverage

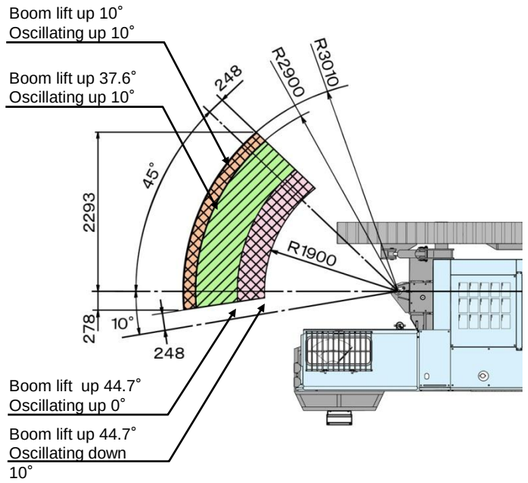

■ Optional equipment

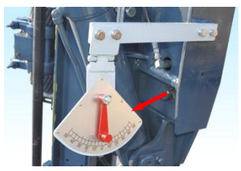
Guide swing angle indicator

Pre-cleaner

Heavy duty under cover

Side door mirror

■ Specifications

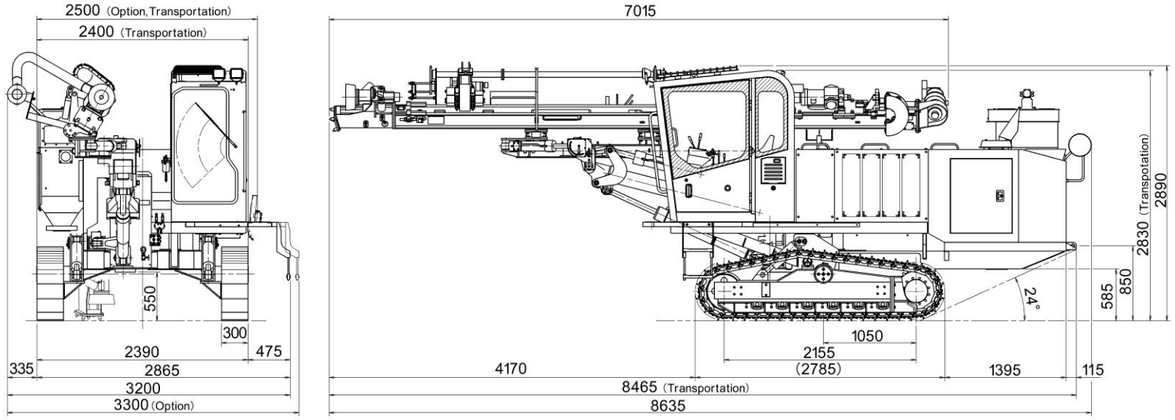

Model		HCR910-DS
Weight & Dimensions	Operating weight（Standard Cab）	10,450 kg
	Operating weight with ROPS／FOPS cab	10,490 kg
	Overall length	8,635 mm
	Overall width	2,865 mm
	Overall width（Transportation）	2,400 mm
	Overall height	2,890 mm
	Overall height (Transportation)	2,830 mm
Drifter	Model	HD709
	Weight	185 kg
	Number of percussion	2,250～2,500 min^{-1}
	Number of rotation	0～250 min^{-1}
Undercarriage	Track length	2,785 mm
	Ground contact length	2,155 mm
	Width of shoe	300 mm
	Ground clearance	550 mm
	Oscillating angle	±10°
	Traveling speed	0 ～ 3.8 km/h
	Gradability	57.7 %（30°）
Engine	Model	C7
	Type	Water-cooled, Direct injection,6-cylinders, Air to air after cooled, turbo-charged, diesel
	Maker	CATERPILLAR®
	Output	168 kW / 2,200 min^{-1}
	Fuel tank capacity	320 liter
Hydraulic pump	Variable displacement piston	2
	Gear pump	3
	Hydraulic oil capacity	170 liter
Compressor	Model	PDS265-S35A（AIRMAN）
	Type	Screw 1-stage forced oil lubrication
	Free air delivery	5.4 m^3/min
	Working air pressure	1.03 MPa
Boom	Model	JF200
	Type	Fixed boom
	Boom lift angle	Up 43° ・ Down 30°
	Boom swing angle	Right 45° ・ Left 10°
Guide shell	Model	GH831
	Length	7,015 mm
	Feed length	4,089 mm（3,904 mm）
	Guide slide length	1,500 mm
	Guide swing angle	Right 50° ・ Left 50°
	Guide tilt angle	180°
	Max.rod pull force	24.5 kN
	Feed type	Hydraulically operated chain drive
Dust collector	Suction capacity	20 m^3/min
	Number of filter	4
Rod arrangement	Number of rod	4
	Control lever	2
Bit & rod	Recommended bit diameter	65 mm ～ 90 mm
	Type of bit	Cross, Button, Ballistic, Conical
	Size of rod	32H,38R,45R,（38H）
	Length of rod	3,050 mm（10 ft）
	Starter rod (M)	4,000 mm（14 ft）